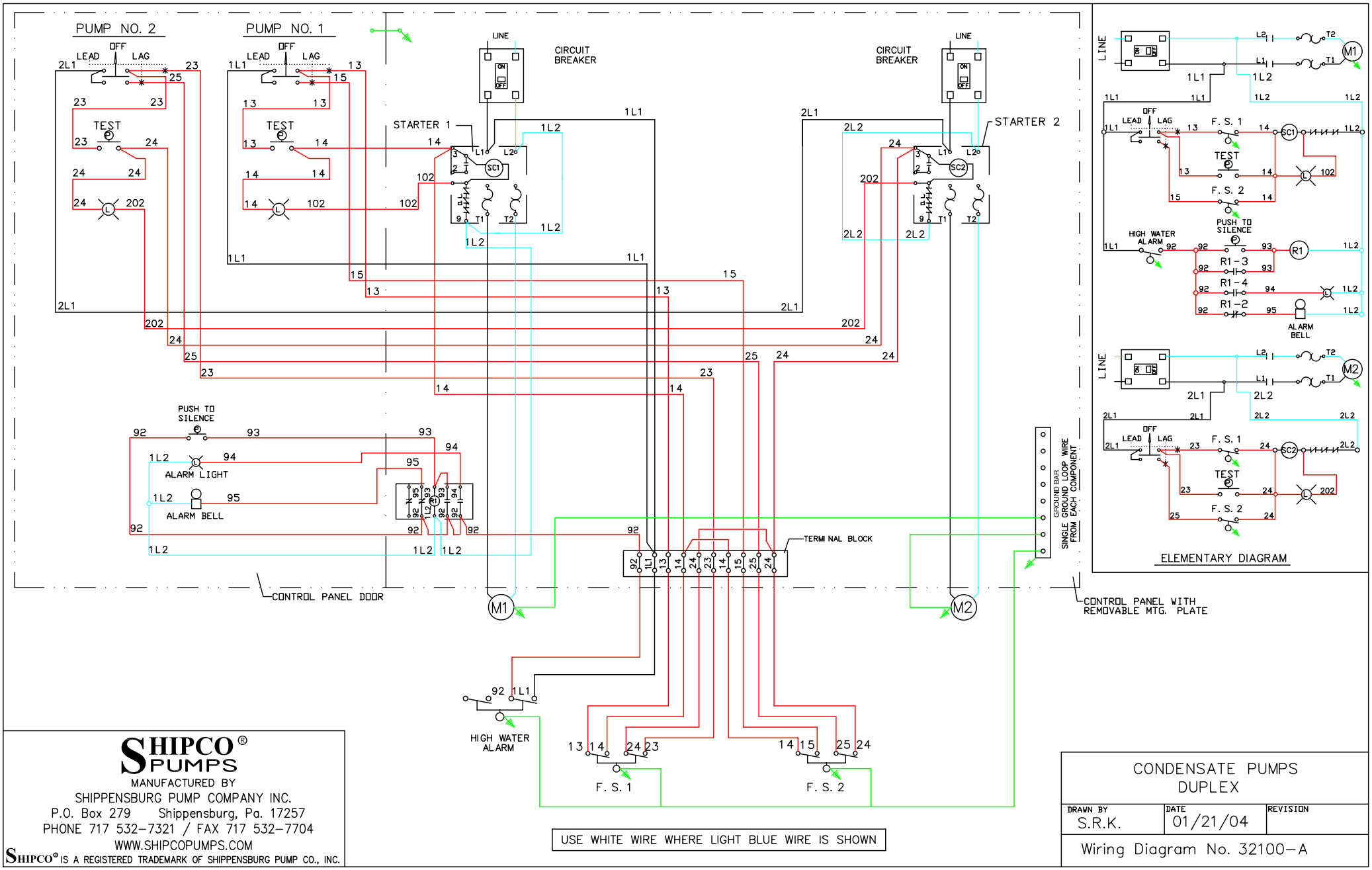

USE WHITE WIRE WHERE LIGHT BLUE WIRE IS SHOWN

SHIPCO® PUMPS
MANUFACTURED BY
SHIPPENSBURG PUMP COMPANY INC.
P.O. Box 279 Shippensburg, Pa. 17257
PHONE 717 532-7321 / FAX 717 532-7704
WWW.SHIPCOPUMPS.COM

SHIPCO® IS A REGISTERED TRADEMARK OF SHIPPENSBURG PUMP CO., INC.

CONDENSATE PUMPS
DUPLEX

DRAWN BY	DATE	REVISION
S.R.K.	01/21/04	

Wiring Diagram No. 32100-A