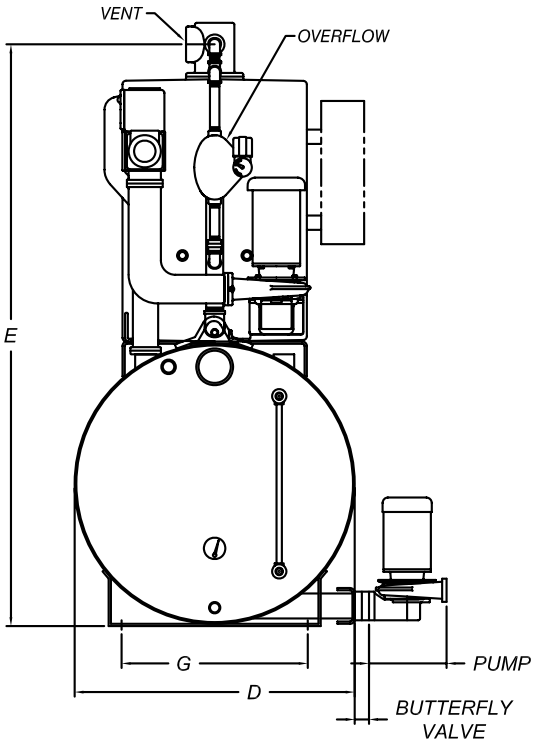

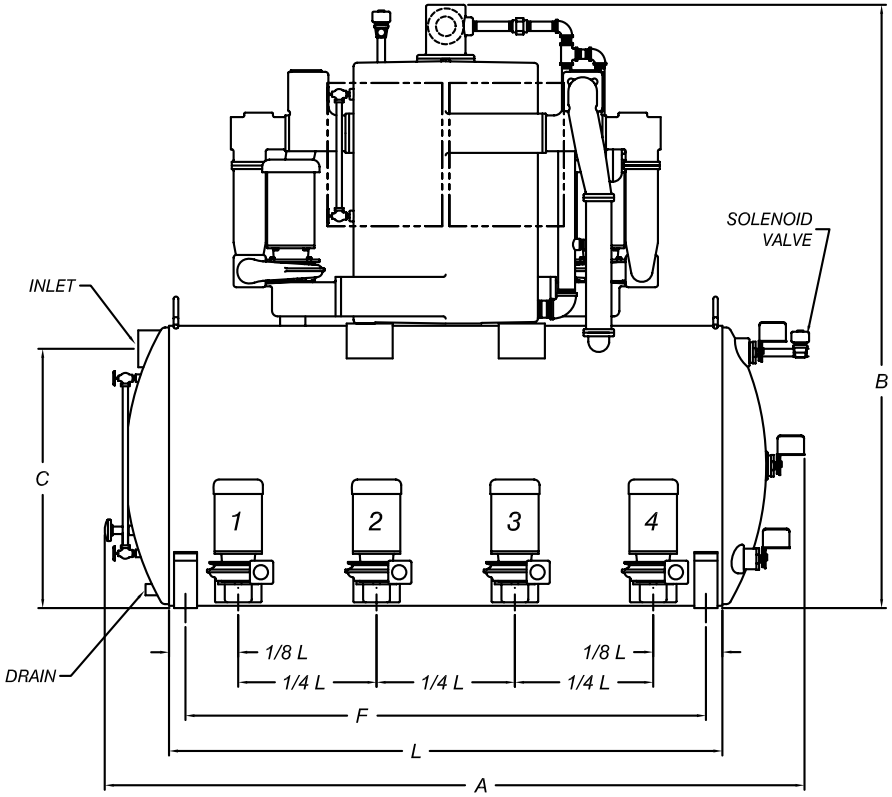

BUTTERFLY VALVE	
SIZE	DIM. "A"
3	1 1/2"
4	2"

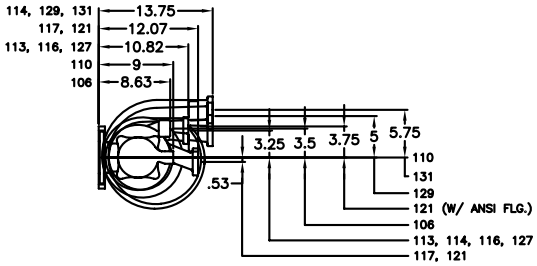

D x L	INLET	OVERFLOW	VENT	DRAIN	A	B	C	E	F	G
24 x 36	2 1/2	2	3	1/2	51	70	22 1/2	67	32 1/2	14 1/2
24 x 48	2 1/2	2	3	1/2	63	70	22 1/2	67	44 1/2	14 1/2
24 x 60	2 1/2	2	3	3/4	75	70	22 1/2	67	56 1/2	14 1/2
30 x 48	3	2	3	3/4	65	76	28 3/16	73	44 1/2	19 1/2
30 x 60	3	2	3	1	77	76	28 3/16	73	56 1/2	19 1/2
30 x 72	4	2	3	1	89	76	27 5/8	73	68 1/2	19 1/2
36 x 60	4	2	3	1	79	82	33 5/8	79	56	23 1/2
36 x 72	4	2	3	1	91	82	33 5/8	79	68	23 1/2
36 x 84	4	2	3	1	103	82	33 5/8	79	80	23 1/2
42 x 72	4	2	3	1	91	88	39 5/8	85	68	27 1/2
42 x 84	4	2	3	1	105	88	39 5/8	85	80	27 1/2
42 x 96	4	2	3	1	119	88	39 5/8	85	91	27 1/2
48 x 84	6 FLG.	2	3	1 1/2	107	94	44 7/8	91	79	32 1/2
48 x 96	6 FLG.	2	3	1 1/2	119	94	44 7/8	91	91	32 1/2

NOTE: WHEN DUPLEX UNIT IS ORDERED CENTER PUMPS ARE USED

RECOMMENDED DISCHARGE NOZZLE SIZE CAPACITY CHART	
0–15	3/4"
16–60	1" OR 1 1/2"
61–113	2"
114–150	2 1/2"
151–250	3"
251–400	4"

SHIPCO® PUMPS
MANUFACTURED BY
SHIPPENSBURG PUMP COMPANY INC.
P.O. Box 279 Shippensburg, Pa. 17257
PHONE 717 532-7321 / FAX 717 532-7704
WWW.SHIPCOPUMPS.COM

SHIPCO® IS A REGISTERED TRADEMARK OF SHIPPENSBURG PUMP CO., INC.

TYPE SHVM

Vacuum Receiver; 19 to 52 CFM W/ Boiler Feed Receiver

DRAWN BY	DATE	REVISION
S.D.	7/09	.8

DIMENSION PRINT **40019**